Q-TUNE

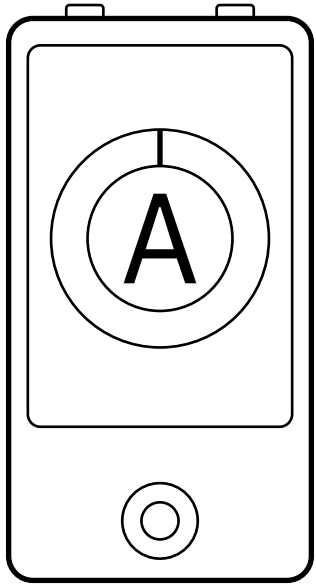

Molinello Music



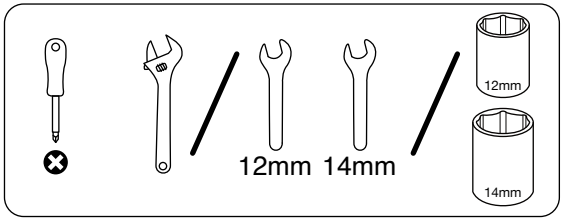



M2.5 x 5
4x

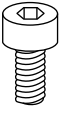

M3 x 5
4x

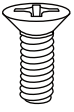

6-32
4x

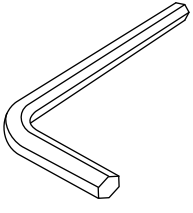

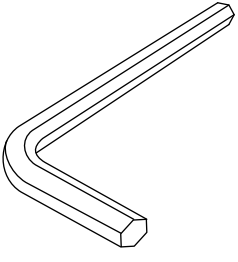

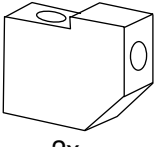

2x

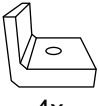

4x

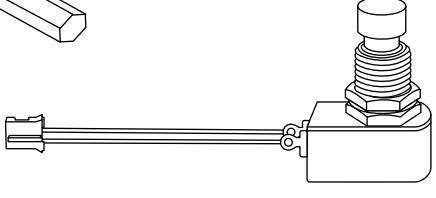

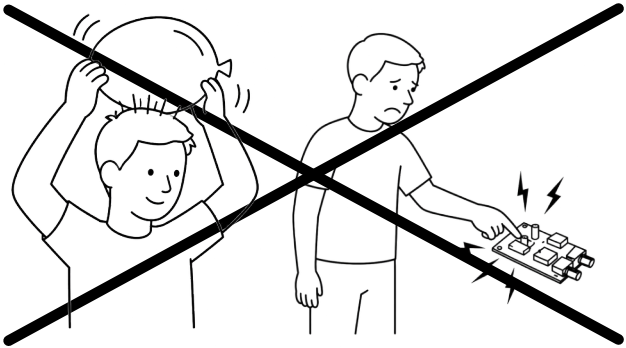





1

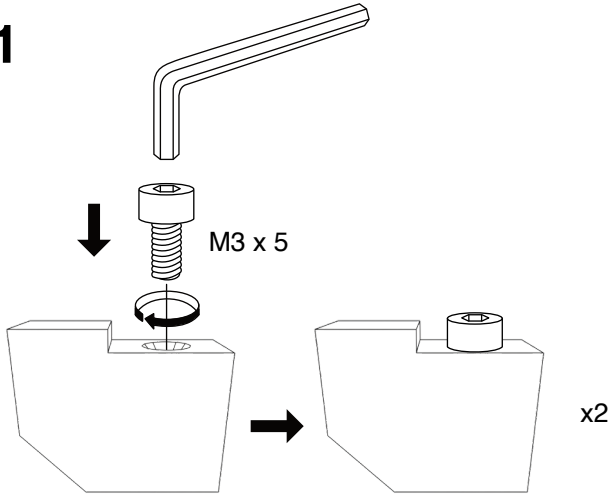

2

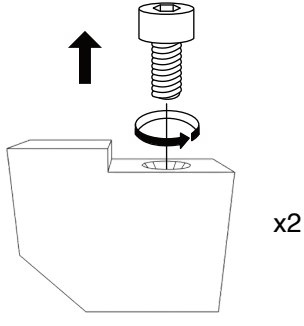

3

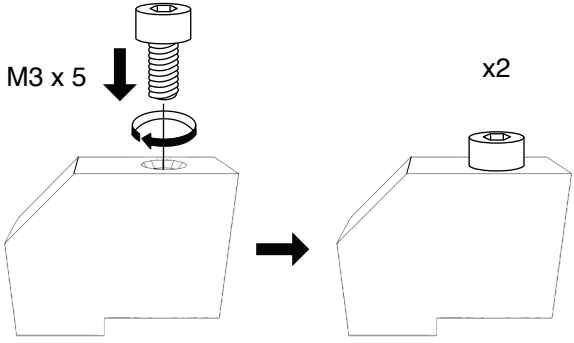

4

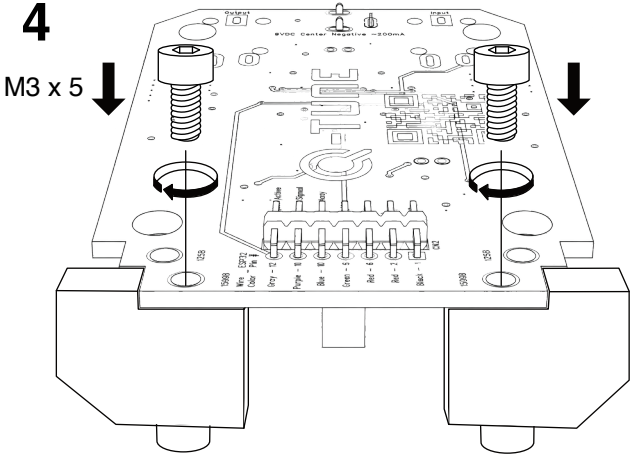

5

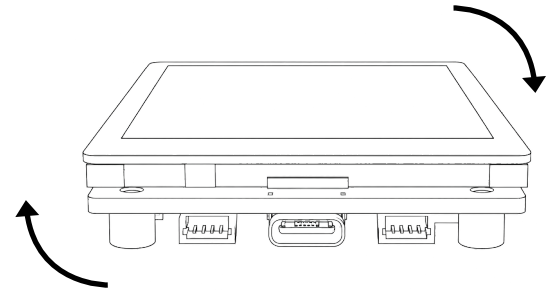

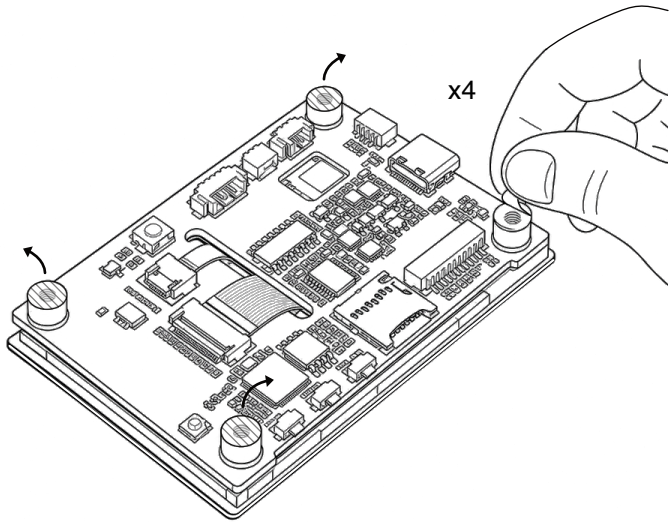

6

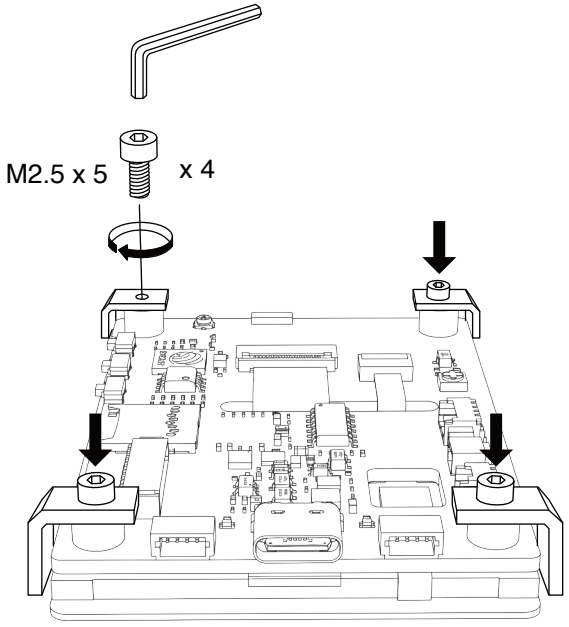

7

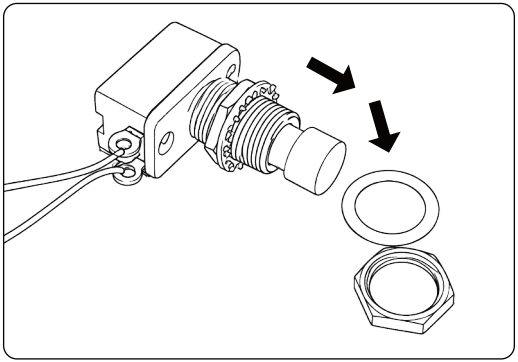

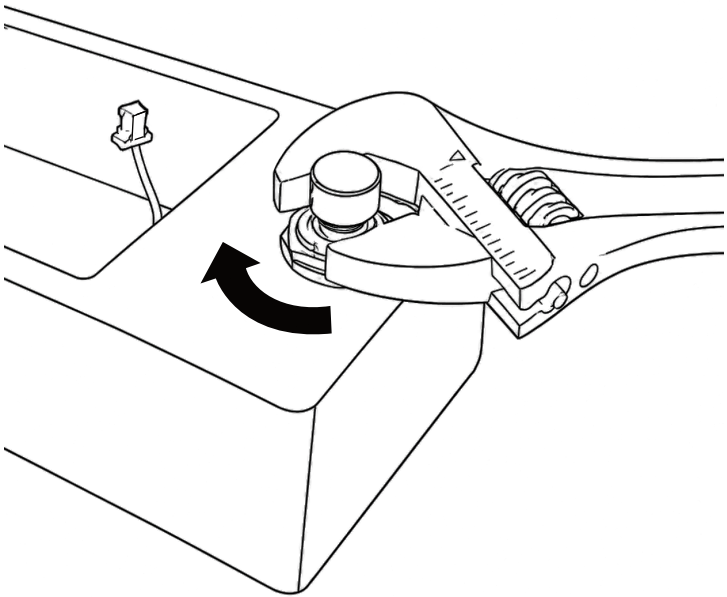

8

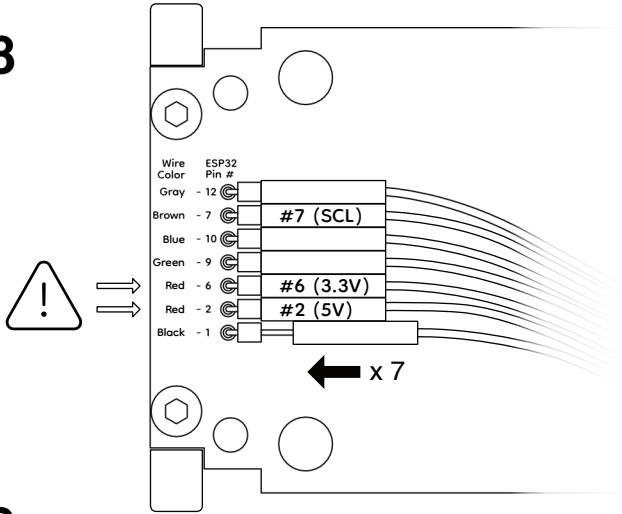
Wire Color
ESP32 Pin #
Gray - 12
Brown - 7
#7 (SCL)
Blue - 10
Green - 9
Red - 6
#6 (3.3V)
Red - 2
#2 (5V)
Black - 1
x 7

9

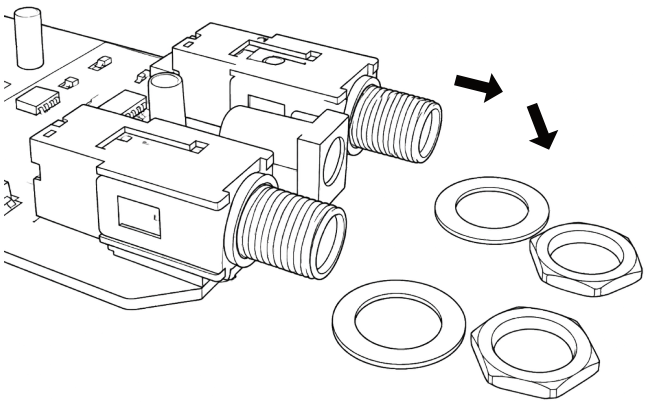

10

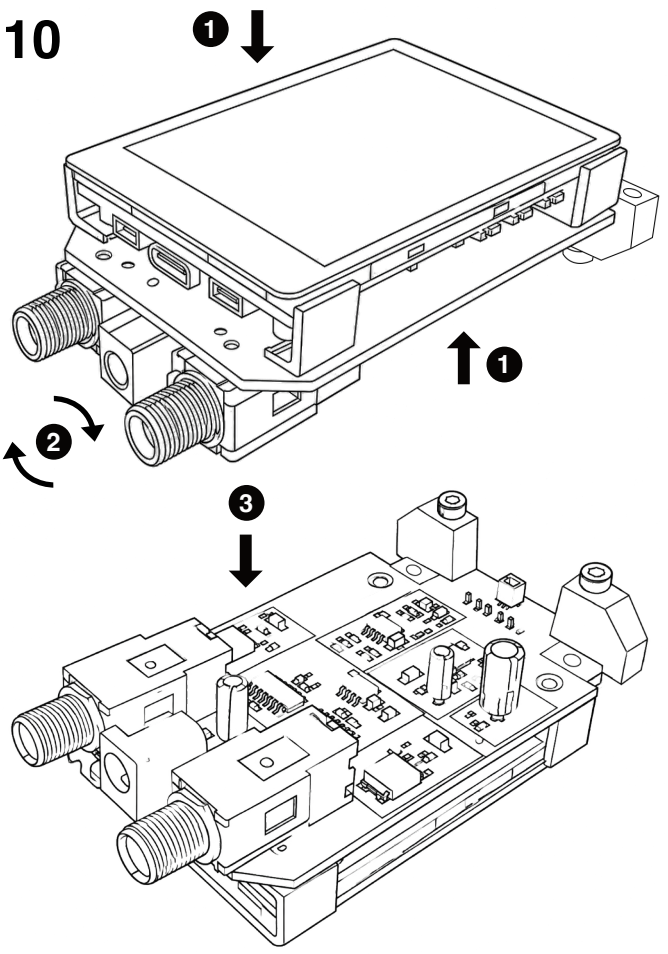

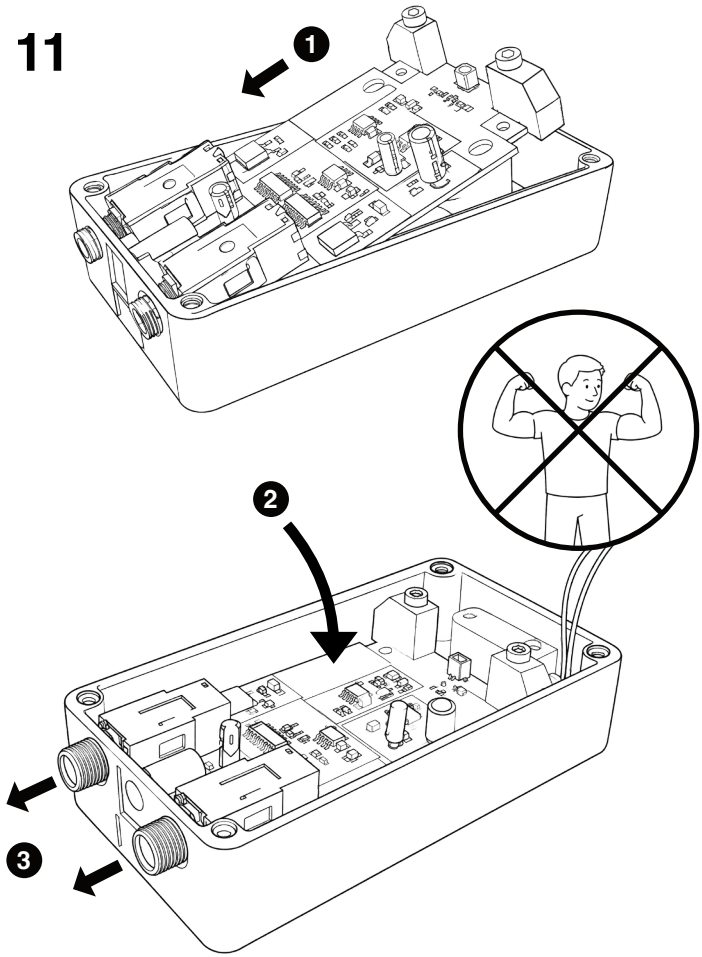
11
1
2
3

12

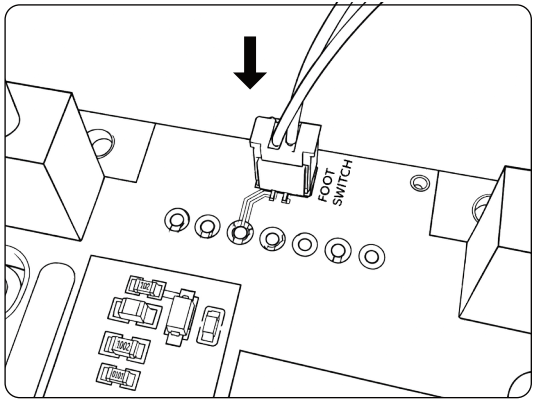

13

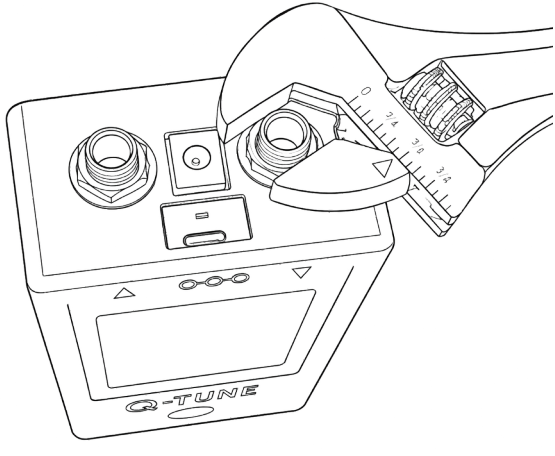

14

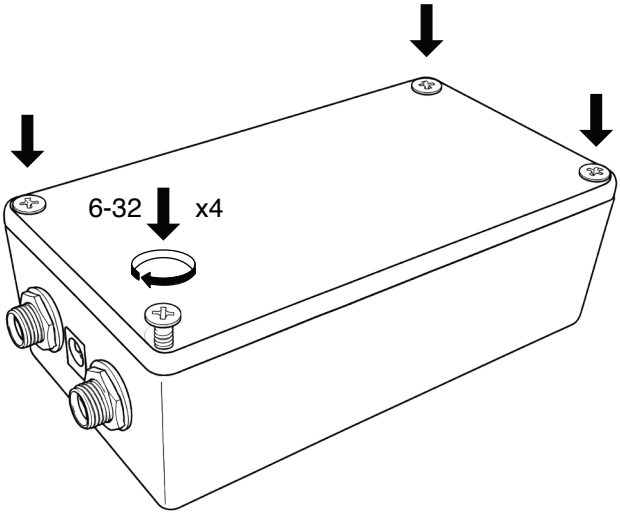

15

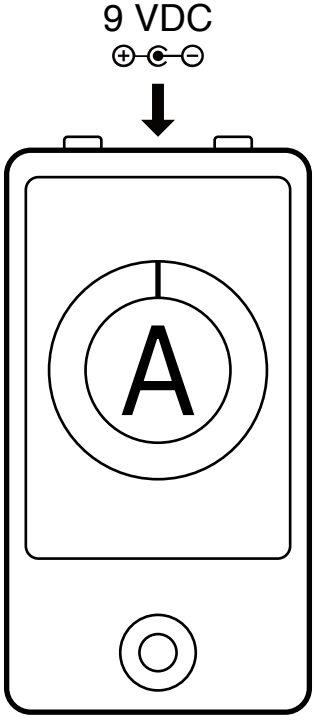

16



Q-TUNE



© 2026 Molinello Music